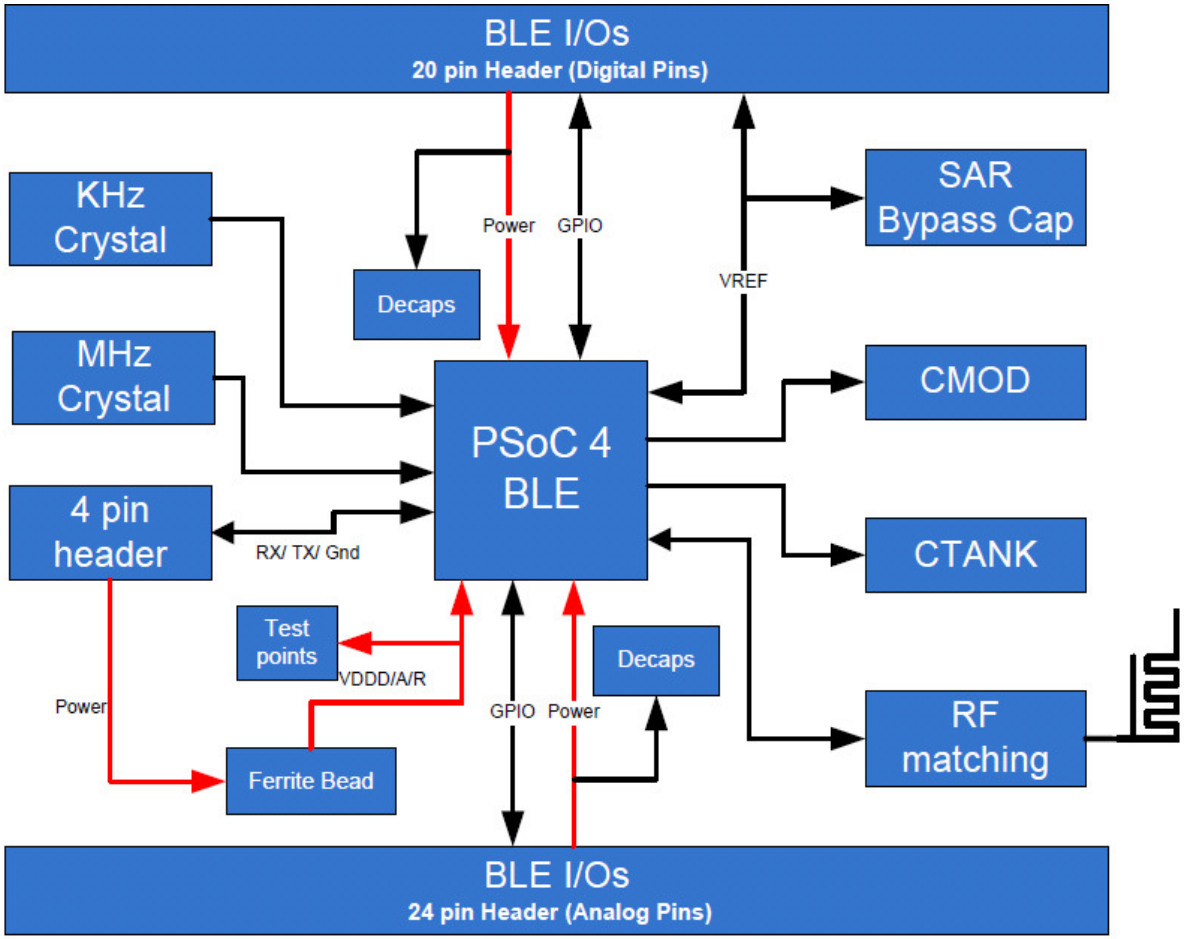

PCA: 121-60215-01
PCB: 600-60248-01
FAB DRW: 610-60240-01
ASSY DRW: 620-60248-01

CYPRESS SEMICONDUCTOR © 2016		
Title: CY8CKIT-143A PSoC 4 BLE 256KB Module		
Size: A4	Document Number: 630-60247-01	Rev: 02
Date: Thursday, March 03, 2016	Sheet 1 of 2	

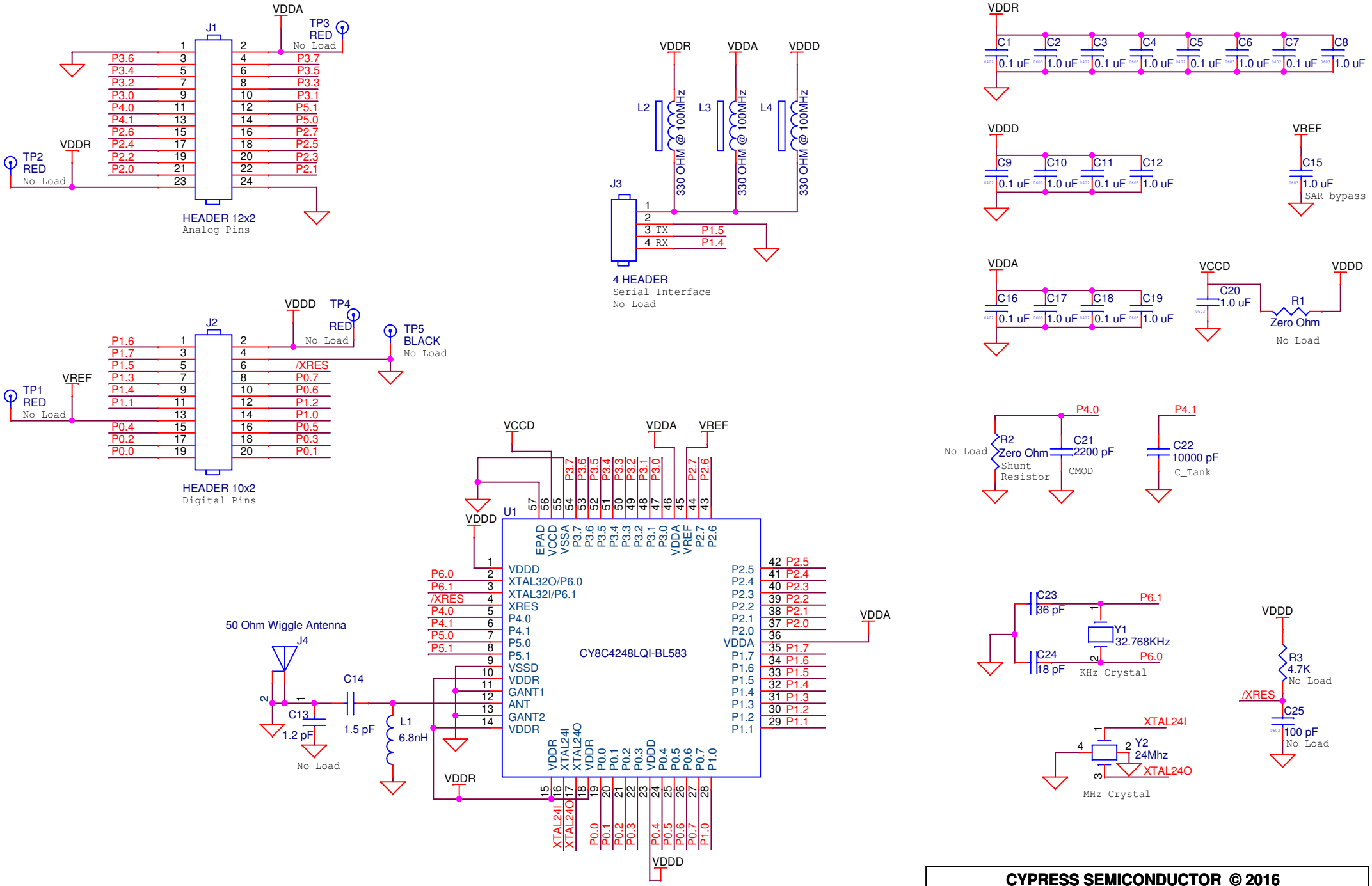

PCA: 121-60215-01
PCB: 600-60248-01
FAB DRW: 610-60240-01
ASSY DRW: 620-60248-01

CYPRESS SEMICONDUCTOR © 2016		
Title: CY8CKIT-143A PSoC 4 BLE 256KB Module		
Size: A4	Document Number: 630-60247-01	Rev: 02
Date: Thursday, March 03, 2016	Sheet 2 of 2	